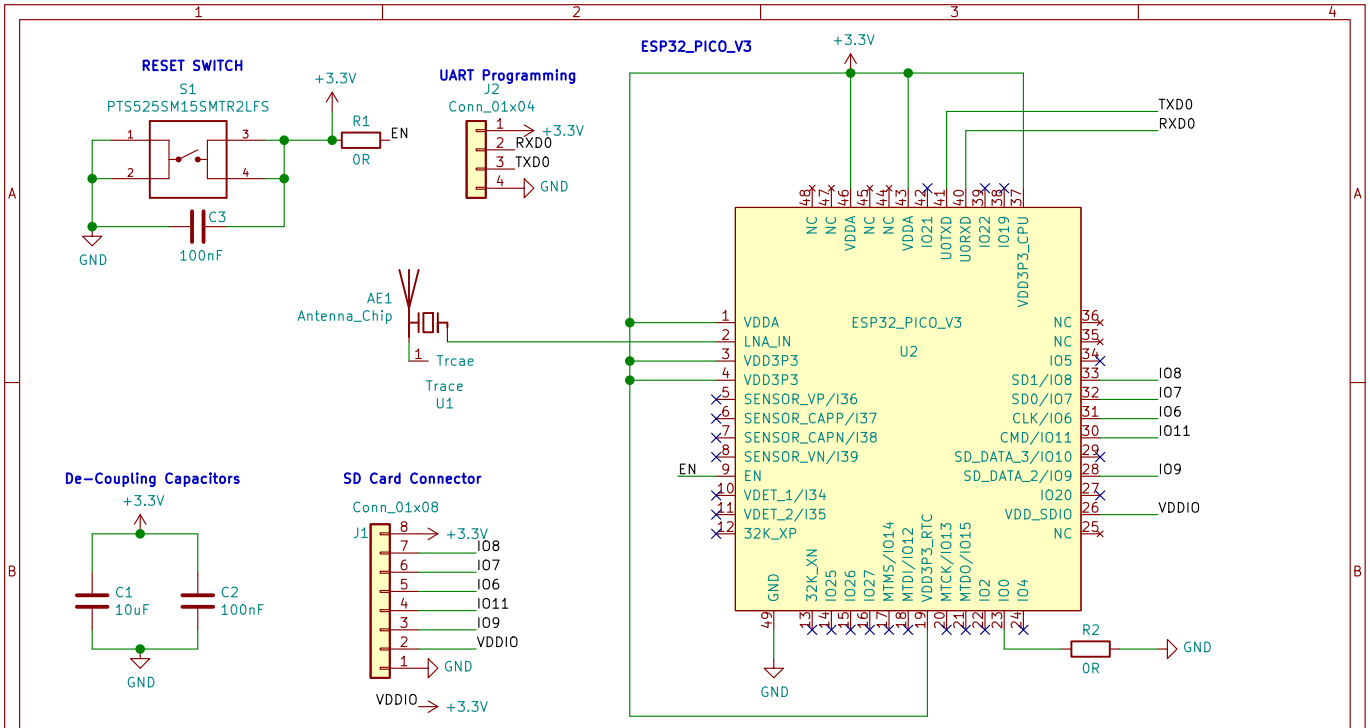
RESET SWITCH
S1
PTS525SM15SMTR2LFS
+3.3V
R1
0R
EN
C3
100nF
GND
UART Programming
J2
Conn_01x04
+3.3V
RXD0
TXD0
GND
ESP32_PICO_V3
+3.3V
TXD0
RXD0
AE1
Antenna_Chip
Trcae
Trace
U1
ESP32_PICO_V3
U2
VDDA
LNA_IN
VDD3P3
VDD3P3
SENSOR_VP/I36
SENSOR_CAPP/I37
SENSOR_CAPN/I38
SENSOR_VN/I39
EN
VDET_1/I34
VDET_2/I35
32K_XP
NC
NC
VDDA
NC
NC
VDDA
IO21
U0TXD
U0RXD
IO22
IO19
VDD3P3_CPU
NC
NC
IO5
SD1/IO8
SD0/IO7
CLK/IO6
CMD/IO11
SD_DATA_3/IO10
SD_DATA_2/IO9
IO20
VDD_SDIO
NC
GND
32K_XN
IO25
IO26
IO27
MTMS/IO14
MTDI/IO12
VDD3P3_RTC
MTCK/IO13
MTDO/IO15
IO2
IO0
IO4
IO8
IO7
IO6
IO11
IO9
VDDIO
R2
0R
GND
De-Coupling Capacitors
+3.3V
C1
10uF
C2
100nF
GND
SD Card Connector
Conn_01x08
J1
+3.3V
IO8
IO7
IO6
IO11
IO9
VDDIO
GND
VDDIO
+3.3V
ESP32 PICO V3 Breakout
Sheet: /
File: esp32-pico-module.sch
Title:
Size: User
Date:
Rev:
KiCad E.D.A. kicad (5.1.5)-3
Id: 1/1